DocuSign Envelope ID: AFE7DA3E-A7A8-4CD6-A608-2CAA45D10F73

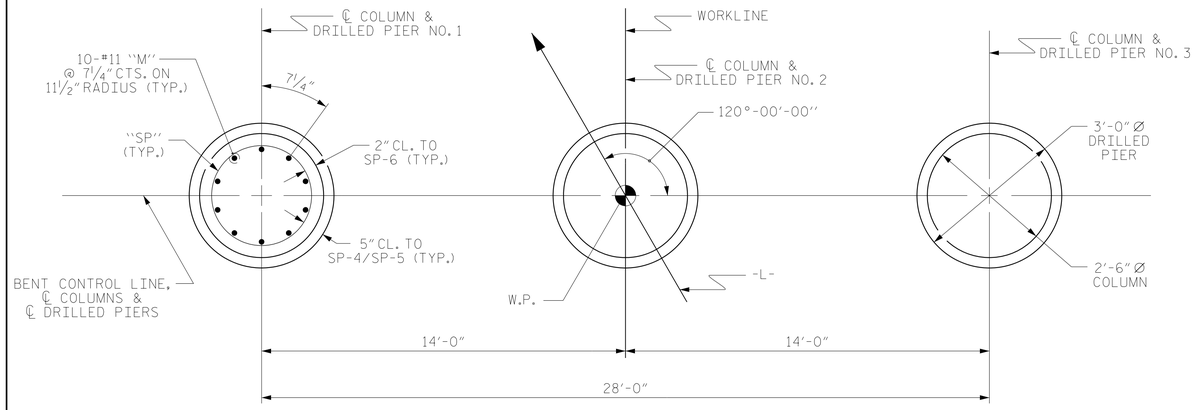


## PLAN OF DRILLED PIERS & COLUMNS

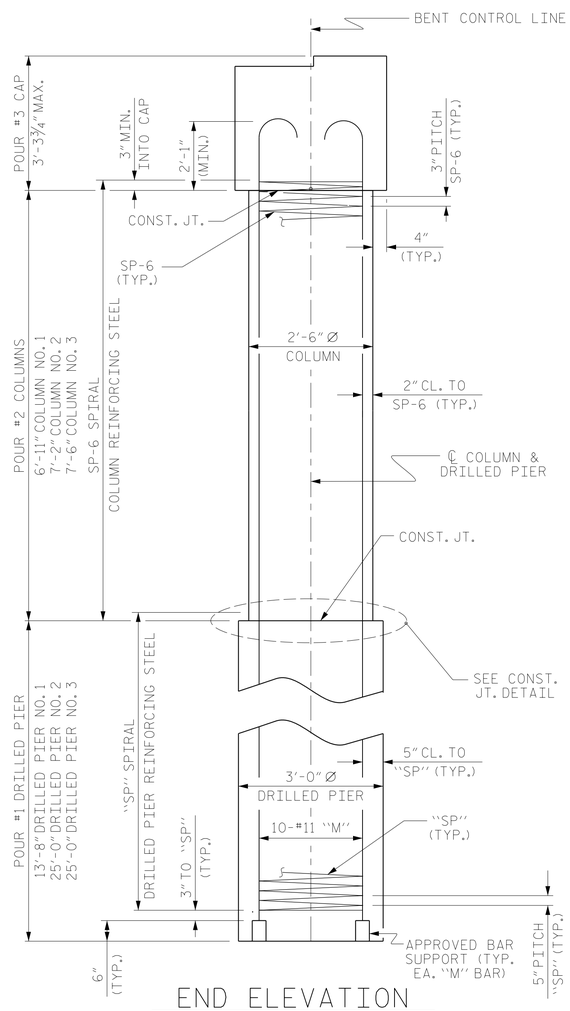


## END ELEVATION

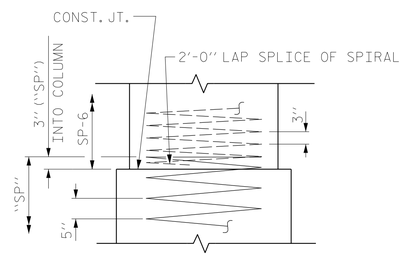


## CONSTRUCTION JOINT DETAIL

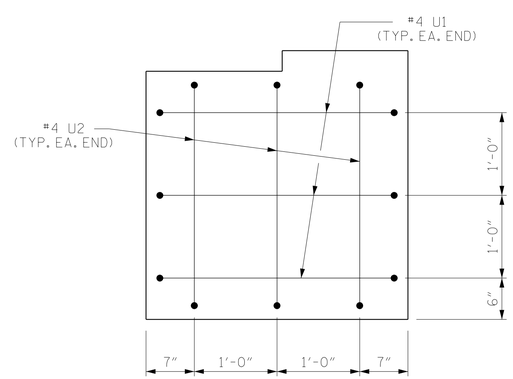


## END OF CAP VIEW

(TYPICAL BOTH ENDS)

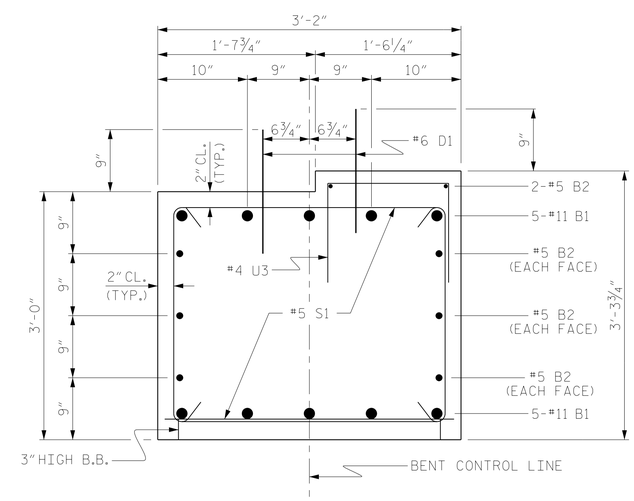


## SECTION THRU CAP

## BAR TYPES

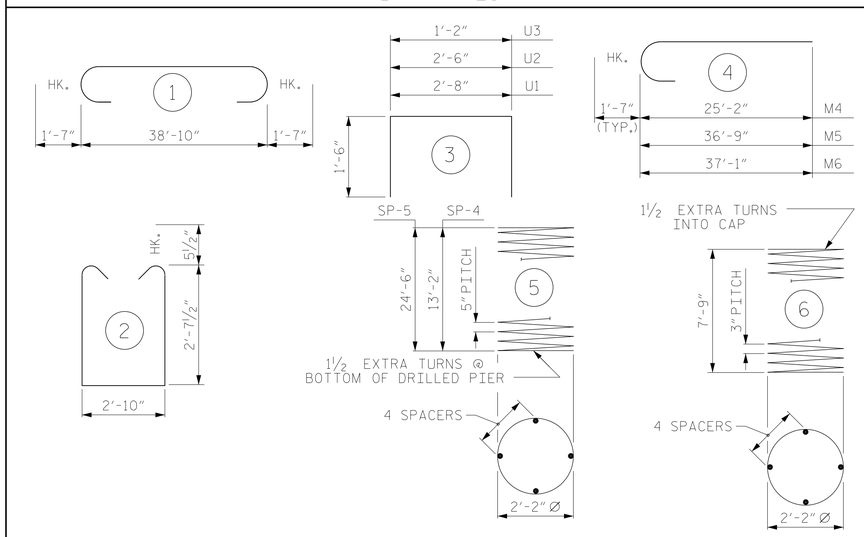


ALL BAR DIMENSIONS ARE OUT TO OUT

## BILL OF MATERIAL
### FOR ONE BENT

| BAR | NO. | SIZE | TYPE | LENGTH | WEIGHT |
|---|---|---|---|---|---|
| B1 | 10 | #11 | 1 | 42'-0" | 2231 |
| B2 | 8 | #5 | STR | 39'-0" | 325 |
| D1 | 40 | #6 | STR | 1'-6" | 90 |
| M4 | 10 | #11 | 4 | 26'-9" | 1421 |
| M5 | 10 | #11 | 4 | 38'-4" | 2037 |
| M6 | 10 | #11 | 4 | 38'-8" | 2054 |
| S1 | 68 | #5 | 2 | 9'-0" | 638 |
| U1 | 6 | #4 | 3 | 5'-8" | 23 |
| U2 | 6 | #4 | 3 | 5'-6" | 22 |
| U3 | 39 | #4 | 3 | 4'-2" | 109 |

REINFORCING STEEL (FOR ONE BENT) 8950 LBS.

| | | | | | |
|---|---|---|---|---|---|
| SP-4 | 1 | * | 5 | 219'-10" | 229 |
| SP-5 | 2 | * | 5 | 400'-5" | 835 |
| SP-6 | 3 | ** | 6 | 216'-8" | 434 |

SPIRAL COLUMN REINFORCING STEEL (FOR ONE BENT) 1498 LBS.

* THE SP-4 AND SP-5 SPIRAL REINFORCING STEEL SHALL BE W31 OR D-31 COLD DRAWN WIRE OR #5 PLAIN OR DEFORMED BAR

** THE SP-6 SPIRAL REINFORCING STEEL SHALL BE W20 OR D-20 COLD DRAWN WIRE OR #4 PLAIN OR DEFORMED BAR

### CLASS A CONCRETE BREAKDOWN (FOR ONE BENT)

| | |
|---|---|
| POUR #2 (COLUMNS) | 3.9 C.Y. |
| POUR #3 (CAP) | 14.8 C.Y. |
| TOTAL CLASS A CONCRETE | 18.7 C.Y. |

### DRILLED PIERS: (FOR ONE BENT)

| | |
|---|---|
| DRILLED PIER CONCRETE | |
| POUR #1 (DRILLED PIERS) | 16.7 C.Y. |
| 3'-0" Ø DRILLED PIER NOT IN SOIL | 23.0 LIN. FT. |
| 3'-0" Ø DRILLED PIER IN SOIL | 40.7 LIN. FT. |
| PERMANENT STEEL CASING FOR 3'-0" Ø DRILLED PIER | 40.2 LIN. FT. |
| △ CSL TUBES | 273 LIN. FT. |

△ THE COST OF CSL TUBES IS INCIDENTAL TO THE UNIT BID PRICE FOR DRILLED PIERS. NO SEPARATE PAYMENT WILL BE MADE FOR CSL TUBES.

PROJECT NO. 17BP.14.R.183
TRANSYLVANIA COUNTY
STATION: 13+38.92 -L-

SHEET 2 OF 2

STATE OF NORTH CAROLINA
DEPARTMENT OF TRANSPORTATION
RALEIGH

SUBSTRUCTURE
BENT NO. 2

NORTH CAROLINA PROFESSIONAL SEAL 18442 ENGINEER

RS&H
RS&H Architects-Engineers-Planners, Inc.
8521 Six Forks Road, Suite 400
Raleigh, NC 27615
919-926-4100 FAX 919-846-9080
www.rsandh.com
North Carolina License Nos. 50073 * F-0493 * C-28

| | | | |
|---|---|---|---|
| ASSEMBLED BY : PDS | DATE : 09/2017 | | |
| CHECKED BY : TLC | DATE : 09/2017 | | |
| DRAWN BY : DGE 3/10 | REV. 11/14 | MAA/TMG | |
| CHECKED BY : MKT 3/10 | | | |

DOCUMENT NOT CONSIDERED FINAL UNLESS ALL SIGNATURES COMPLETED

| REVISIONS | | | | | | SHEET NO. |
|---|---|---|---|---|---|---|
| NO. | BY: | DATE: | NO. | BY: | DATE: | S-20 |
| 1 | | | 3 | | | TOTAL SHEETS |
| 2 | | | 4 | | | 23 |

4/27/2021
\\ctffile01\transportation\P\1030014001_Div 14 Bridges_2016\1030014008_R.183 870063\Design\Structures\Working DGN\063_039_17BP.14.R.183_SMU_B*20_S-20.dgn
CuanyN

STD. NO. DP_BT_30_120S_<50'