DocuSign Envelope ID: AFE7DA3E-A7A8-4CD6-A608-2CAA45D10F73

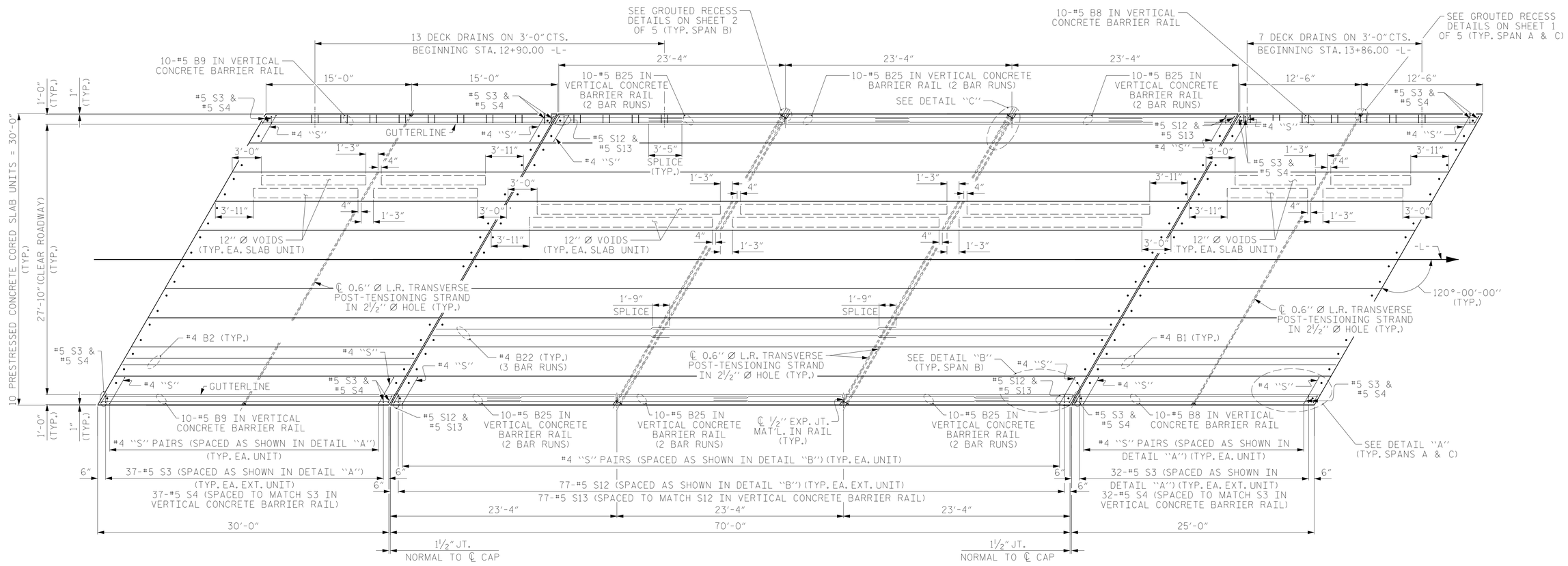

PLAN OF SPANS

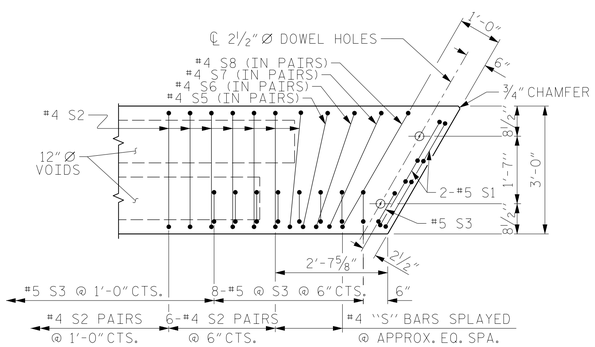

DETAIL "A"

(SIMILAR EACH END OF UNIT)
NOTE: EXTERIOR UNIT SHOWN - INTERIOR UNIT SIMILAR EXCEPT OMIT #5 S3 BARS.

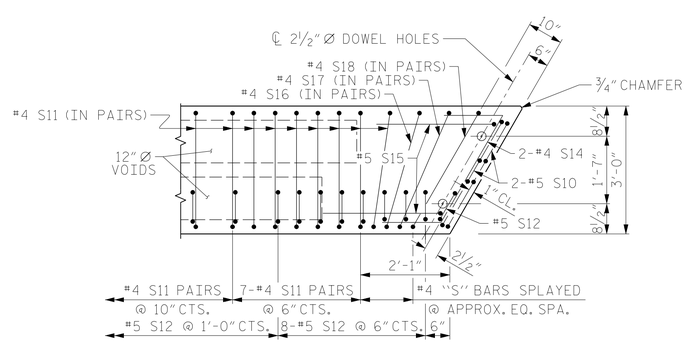

DETAIL "B"

(SIMILAR EACH END OF UNIT)
NOTE: EXTERIOR UNIT SHOWN - INTERIOR UNIT SIMILAR EXCEPT OMIT #5 S12 BARS.

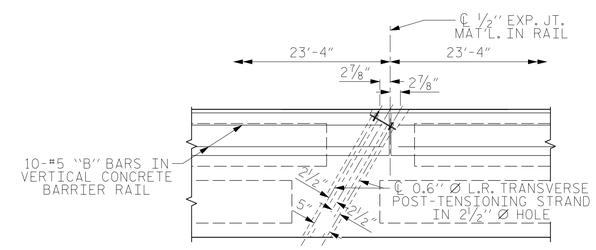

DETAIL "C"

#4 BARS MAY BE SHIFTED AS NECESSARY TO MAINTAIN 1" CLEAR TO GROUTED RECESS AND 2½" Ø TRANSVERSE POST-TENSIONING STRAND HOLES

PROJECT NO. 17BP.14.R.183
TRANSYLVANIA COUNTY
STATION: 13+38.92 -L-

SHEET 3 OF 5

NORTH CAROLINA PROFESSIONAL SEAL 18442 ENGINEER LEON BOLLINGER JR.

RS&H

RS&H Architects-Engineers-Planners, Inc.
8521 Six Forks Road, Suite 400
Raleigh, NC 27615
919-926-4100 FAX 919-846-9080
www.rsandh.com
North Carolina License Nos. 50073 · F-0493 · C-28

STATE OF NORTH CAROLINA
DEPARTMENT OF TRANSPORTATION
RALEIGH

SUPERSTRUCTURE

PLAN OF SPANS

REVISIONS						SHEET NO.
NO.	BY:	DATE:	NO.	BY:	DATE:	S-9
1			3			TOTAL SHEETS
2			4			23

DOCUMENT NOT CONSIDERED FINAL UNLESS ALL SIGNATURES COMPLETED

DRAWN BY :	PDS	DATE :	05/2017
CHECKED BY :	TLC	DATE :	09/2017
DESIGN ENGINEER OF RECORD:	PDS	DATE :	05/2017

4/27/2021
\\ctfile01\transportation\P\1030014001_Div 14 Bridges_2016\1030014008_R.183 870063\Design\Structures\Working DGN\063_017_17BP.14.R.183_SMU_S*09_S-9.dgn
CuanyN