DocuSign Envelope ID: AFE7DA3E-A7A8-4CD6-A608-2CAA45D10F73

BILL OF MATERIAL FOR ONE 25′ CORED SLAB UNIT

				EXTERIOR UNIT		INTERIOR UNIT	
BAR	NUMBER	SIZE	TYPE	LENGTH	WEIGHT	LENGTH	WEIGHT
B1	2	#4	STR	24′-7″	33	24′-7″	33
S1	8	#5	3	4′-6″	38	4′-6″	38
S2	52	#4	3	5′-4″	185	5′-4″	185
✳ S3	34	#5	1	5′-7″	198		
S5	4	#4	3	5′-5″	14	5′-5″	14
S6	4	#4	3	5′-6″	15	5′-6″	15
S7	4	#4	3	5′-7″	15	5′-7″	15
S8	4	#4	3	5′-9″	15	5′-9″	15
REINFORCING STEEL			LBS.		315		315
✳ EPOXY COATED REINFORCING STEEL			LBS.		198		
5000 P.S.I. CONCRETE			CU. YDS.		3.8		3.8
0.6″ Ø L.R. STRANDS			No.		9		9

BILL OF MATERIAL FOR ONE 30′ CORED SLAB UNIT

				EXTERIOR UNIT		INTERIOR UNIT	
BAR	NUMBER	SIZE	TYPE	LENGTH	WEIGHT	LENGTH	WEIGHT
B2	2	#4	STR	29′-7″	40	29′-7″	40
S1	8	#5	3	4′-6″	38	4′-6″	38
S2	62	#4	3	5′-4″	221	5′-4″	221
✳ S3	39	#5	1	5′-7″	227		
S5	4	#4	3	5′-5″	14	5′-5″	14
S6	4	#4	3	5′-6″	15	5′-6″	15
S7	4	#4	3	5′-7″	15	5′-7″	15
S8	4	#4	3	5′-9″	15	5′-9″	15
REINFORCING STEEL			LBS.		358		358
✳ EPOXY COATED REINFORCING STEEL			LBS.		227		
5000 P.S.I. CONCRETE			CU. YDS.		4.5		4.5
0.6″ Ø L.R. STRANDS			No.		9		9

DEAD LOAD DEFLECTION AND CAMBER

	3′-0″ x 1′-9″
25′ & 30′ CORED SLAB UNITS	0.6″ Ø L.R. STRAND
CAMBER (SLAB ALONE IN PLACE)	1/4″ ↑
DEFLECTION DUE TO SUPERIMPOSED DEAD LOAD✳✳	1/8″ ↓
FINAL CAMBER	1/8″ ↑

✳✳ INCLUDES FUTURE WEARING SURFACE

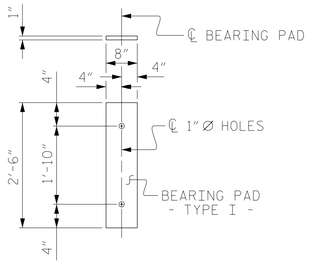

FIXED END
(TYPE I - 40 REQ′D)

ELASTOMERIC BEARING DETAILS

ELASTOMER IN SPAN A & C BEARINGS SHALL BE 60 DUROMETER HARDNESS.

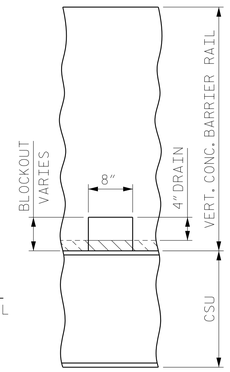

ELEVATION AT DRAIN

BAR TYPES

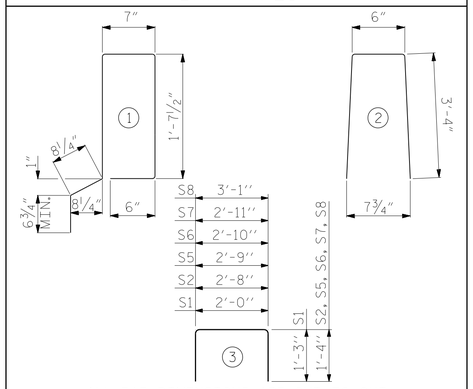

ALL BAR DIMENSIONS ARE OUT TO OUT

CORED SLABS REQUIRED

	NUMBER	LENGTH	TOTAL LENGTH
25′ UNIT			
EXTERIOR C.S.	2	25′-0″	50′-0″
INTERIOR C.S.	8	25′-0″	200′-0″
TOTAL	10	25′-0″	250′-0″
30′ UNIT			
EXTERIOR C.S.	2	30′-0″	60′-0″
INTERIOR C.S.	8	30′-0″	240′-0″
TOTAL	10	30′-0″	300′-0″

GUTTERLINE ASPHALT THICKNESS & RAIL HEIGHT

	ASPHALT OVERLAY THICKNESS	RAIL HEIGHT
	@ MID-SPAN	@ MID-SPAN
25′ & 30′ UNITS	2 5/8″	3′-8 5/8″

BILL OF MATERIAL FOR VERTICAL CONCRETE BARRIER RAIL

BAR	BARS PER PAIR OF EXTERIOR UNITS	TOTAL NO.	SIZE	TYPE	LENGTH	WEIGHT
	25′ UNIT					
✳ B8	20	20	#5	STR	24′-6″	511
✳ S4	68	68	#5	2	7′-2″	508
	30′ UNIT					
✳ B9	20	20	#5	STR	29′-6″	615
✳ S4	78	78	#5	2	7′-2″	583
✳ EPOXY COATED REINFORCING STEEL				LBS.		2217
CLASS AA CONCRETE				CU.YDS.		14.1
TOTAL VERTICAL CONCRETE BARRIER RAIL				LN. FT.		110.00

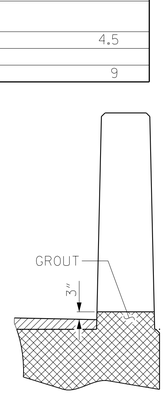

SECTION T-T
AT OPEN JOINT AT BENT
(THIS IS TO BE USED WHERE FOAM JOINT IS NOT USED)

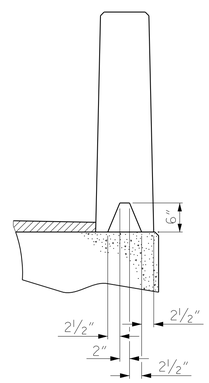

SECTION S-S
AT DAM IN OPEN JOINT
(THIS IS TO BE USED ONLY WHEN SLIP FORM IS USED)

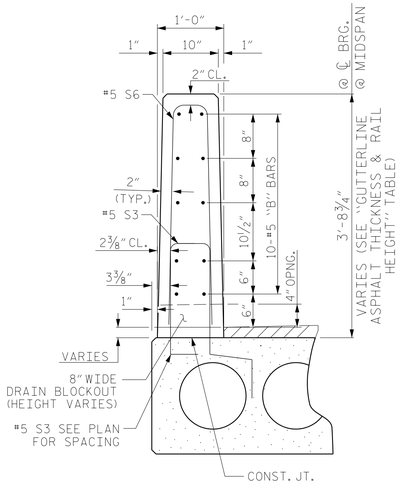

SECTION THRU RAIL

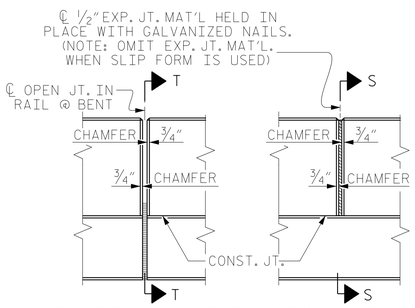

ELEVATION AT EXPANSION JOINTS

VERTICAL CONCRETE BARRIER RAIL SECTION

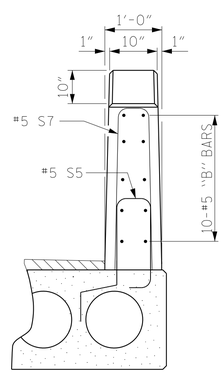

END VIEW

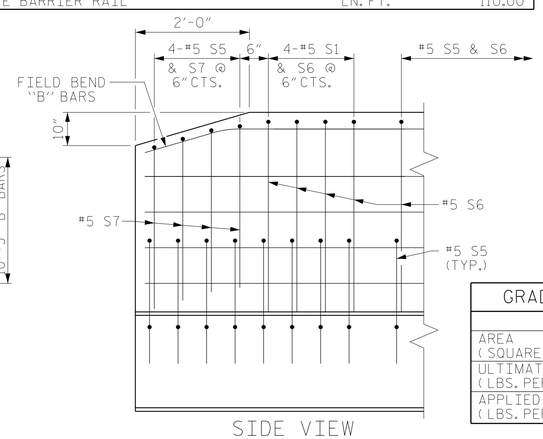

SIDE VIEW

END OF BARRIER RAIL DETAILS

GRADE 270 STRANDS

	0.6″ Ø L.R.
AREA (SQUARE INCHES)	0.217
ULTIMATE STRENGTH (LBS. PER STRAND)	58,600
APPLIED PRESTRESS (LBS. PER STRAND)	43,950

NOTES

ALL PRESTRESSING STRANDS SHALL BE 7-WIRE LOW RELAXATION GRADE 270 STRANDS AND SHALL CONFORM TO AASHTO M203 EXCEPT FOR SAMPLING REQUIREMENTS WHICH SHALL BE IN ACCORDANCE WITH THE STANDARD SPECIFICATIONS.

ALL REINFORCING STEEL CAST WITH THE CORED SLAB SECTIONS SHALL BE GRADE 60 AND SHALL BE INCLUDED IN THE UNIT PRICE BID FOR PRESTRESSED CONCRETE CORED SLABS.

RECESSES FOR TRANSVERSE STRANDS SHALL BE GROUTED AFTER THE TENSIONING OF THE STRANDS.

THE 2 1/2″ Ø DOWEL HOLES AT FIXED ENDS OF SLAB SECTIONS SHALL BE FILLED WITH GROUT. THE 2 1/2″ Ø DOWEL HOLES AT EXPANSION ENDS OF SLAB SECTIONS SHALL BE FILLED WITH JOINT SEALER MATERIAL TO 1 1/2″ ABOVE THE TOP OF DOWELS AND THEN FILLED WITH GROUT.

THE JOINT SEALER MATERIAL SHALL CONFORM TO THE REQUIREMENTS OF TYPE SL LOW MODULUS SILICONE SEALANT. THE 2″ Ø BACKER ROD SHALL CONFORM TO THE REQUIREMENTS OF TYPE M BOND BREAKER. SEE SECTION 1028 OF THE STANDARD SPECIFICATIONS.

WHEN CORED SLABS ARE CAST, AN INTERNAL HOLD-DOWN SYSTEM SHALL BE EMPLOYED TO PREVENT VOIDS FROM RISING OR MOVING SIDEWAYS. AT LEAST SIX WEEKS PRIOR TO CASTING CORED SLABS, THE CONTRACTOR SHALL SUBMIT TO THE ENGINEER FOR REVIEW AND COMMENT, DETAILED DRAWINGS OF THE PROPOSED HOLD-DOWN SYSTEM. IN ADDITION TO STRUCTURAL DETAILS, LOCATION AND SPACING OF THE HOLD-DOWNS SHALL BE INDICATED.

WHEN A CONCRETE WEARING SURFACE IS DETAILED ON THE CORED SLAB BRIDGE TYPICAL SECTION, THE TOP SURFACE OF THE CORED SLAB UNITS SHALL HAVE A 3/8″ RAKED FINISH.

THE TRANSFER OF LOAD FROM THE ANCHORAGES TO THE CORED SLAB UNIT SHALL BE DONE WHEN THE CONCRETE HAS REACHED A COMPRESSIVE STRENGTH OF NOT LESS THAN 4000 PSI.

ALL REINFORCING STEEL IN BARRIER RAILS SHALL BE EPOXY COATED.

PRESTRESSING STRANDS SHALL BE CUT FLUSH WITH THE CORED SLAB UNIT ENDS.

APPLY EPOXY PROTECTIVE COATING TO CORED SLAB UNIT ENDS.

GROOVED CONTRACTION JOINTS, 1/2″ IN DEPTH, SHALL BE TOOLED IN ALL EXPOSED FACES OF THE BARRIER RAIL AND IN ACCORDANCE WITH ARTICLE 825-10(B) OF THE STANDARD SPECIFICATIONS. A CONTRACTION JOINT SHALL BE LOCATED AT EACH THIRD POINT BETWEEN BARRIER RAIL EXPANSION JOINTS. ONLY ONE CONTRACTION JOINT IS REQUIRED AT MIDPOINT OF BARRIER RAIL SEGMENTS LESS THAN 20 FEET IN LENGTH AND NO CONTRACTION JOINTS ARE REQUIRED FOR THOSE SEGMENTS LESS THAN 10 FEET IN LENGTH.

FLAME CUTTING OF THE TRANSVERSE POST-TENSIONING STRAND IS NOT ALLOWED.

THE PERMITTED THREADED INSERTS ARE DETAILED AS AN OPTION FOR THE CONTRACTOR TO ATTACH FALSEWORK AND FORMWORK DURING CONSTRUCTION.

THE PERMITTED THREADED INSERTS IN THE EXTERIOR UNITS SHALL BE SIZED BY THE CONTRACTOR, SPACED AT 4′-0″ CENTERS AND GALVANIZED IN ACCORDANCE WITH SECTION 1076 OF THE STANDARD SPECIFICATIONS. STAINLESS STEEL THREADED INSERTS MAY BE USED AS AN ALTERNATE.

THE PERMITTED THREADED INSERTS SHALL BE GROUTED BY THE CONTRACTOR IMMEDIATELY FOLLOWING REMOVAL OF THE FALSEWORK.

THE COST OF THE PERMITTED THREADED INSERTS SHALL BE INCLUDED IN THE PRICE BID FOR THE PRECAST UNITS.

THE DRAIN OPENING AT THE GUTTERLINE SHALL BE 4″ X 8″. THE HEIGHT OF THE BLOCKOUT IN THE VERTICAL CONCRETE BARRIER RAIL SHALL EXTEND FROM THE TOP OF THE CORED SLAB UNIT TO THE TOP OF THE DRAIN OPENING.

A TOTAL OF 20 DECK DRAINS ARE TO BE PROVIDED, 13′ ON 3′ CENTERS FROM STA. 12+90 TO STA. 13+26 AND 7 ON 3′ CENTERS FROM STA. 13+86 TO STA. 14+04.

APPLY EPOXY PROTECTIVE COATING TO EXTERIOR FACE OF THE EXTERIOR CORED SLAB UNITS THAT REQUIRE DRAINS IN THE BARRIER RAIL.

PROJECT NO. 17BP.14.R.183
TRANSYLVANIA COUNTY
STATION: 13+38.92 -L-

SHEET 4 OF 5

ASSEMBLED BY :	PDS	DATE :	05/2017
CHECKED BY :	TLC	DATE :	09/2017
DRAWN BY : WJH 4/89	REV. 1/15	RWW/TMG	
CHECKED BY : FCJ 5/89	REV. 12/17	MAA/THC	
	REV. 5/18	MAA/THC	

DOCUMENT NOT CONSIDERED FINAL UNLESS ALL SIGNATURES COMPLETED

NORTH CAROLINA PROFESSIONAL SEAL 18442 ENGINEER FRANCISCO LEON BOLLINGER JR.
Docu Signed by: 4/27/2021 10:09:58 AM PDT

RS&H
RS&H Architects-Engineers-Planners, Inc.
8521 Six Forks Road, Suite 400
Raleigh, NC 27615
919-926-4100 FAX 919-846-9080
www.rsandh.com
North Carolina License Nos. 50073 / F-0493 / C-28

STATE OF NORTH CAROLINA
DEPARTMENT OF TRANSPORTATION
RALEIGH

STANDARD

3′-0″ X 1′-9″
PRESTRESSED CONCRETE
CORED SLAB UNIT
SPANS A & C

REVISIONS						SHEET NO.
NO.	BY:	DATE:	NO.	BY:	DATE:	S-10
1			3			TOTAL SHEETS
2			4			23

(SHT 4) STD. NO. PCS3

4/27/2021
\\cltfile01\transportation\P\1030014001_Div 14 Bridges_2016\1030014008_R.183 870063\Design\Structures\Working DGN\063_019_17BP.14.R.183_SMU_BOM10_S-10.dgn
CuanyN